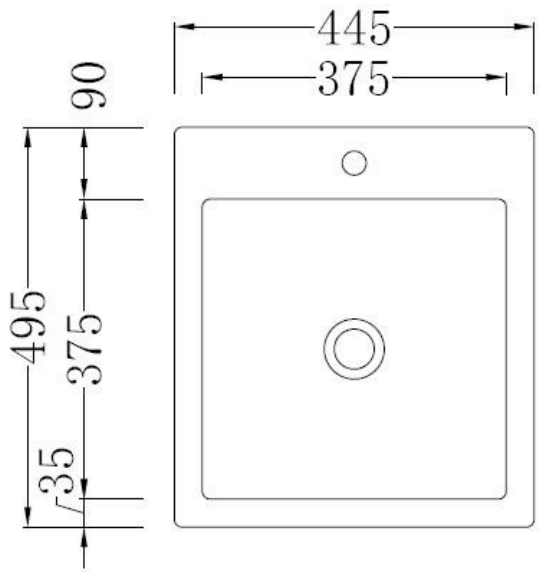


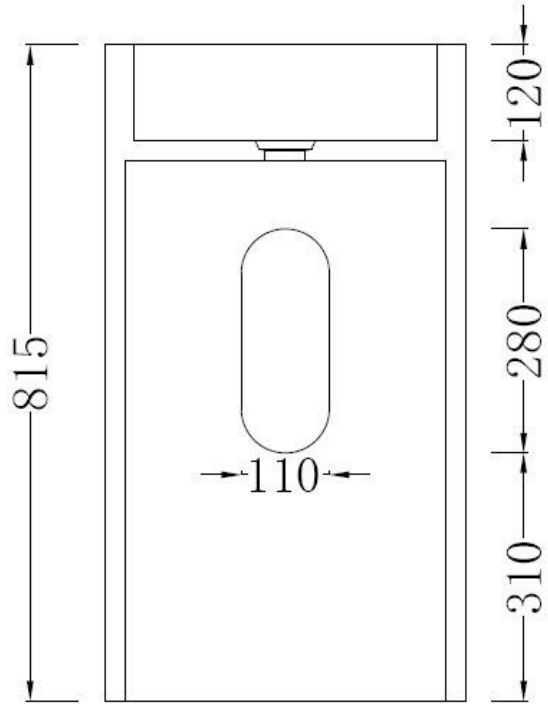


# PG44582